THE INFORMATION CONTAINED IN THIS DRAWING IS THE SOLE PROPERTY OF ANDERSON POWER PRODUCTS. ANY REPRODUCTION IN PART OR WHOLE WITHOUT THE WRITTEN PERMISSION OF ANDERSON POWER PRODUCTS IS PROHIBITED.

Copyright 2012

ANDERSON POWER PRODUCTS RESERVES THE RIGHT TO ALTER PRODUCT TYPES, THEIR TECHNICAL DATA, DIMENSION, STYLE AND ACCESSORIES WITHOUT PRIOR NOTIFICATION.

COMPONENTS INCLUDED

ITEM	QTY	DESCRIPTION
1	1	STRAIGHT PLUG SHELL (FEMALE) WITH O-RING

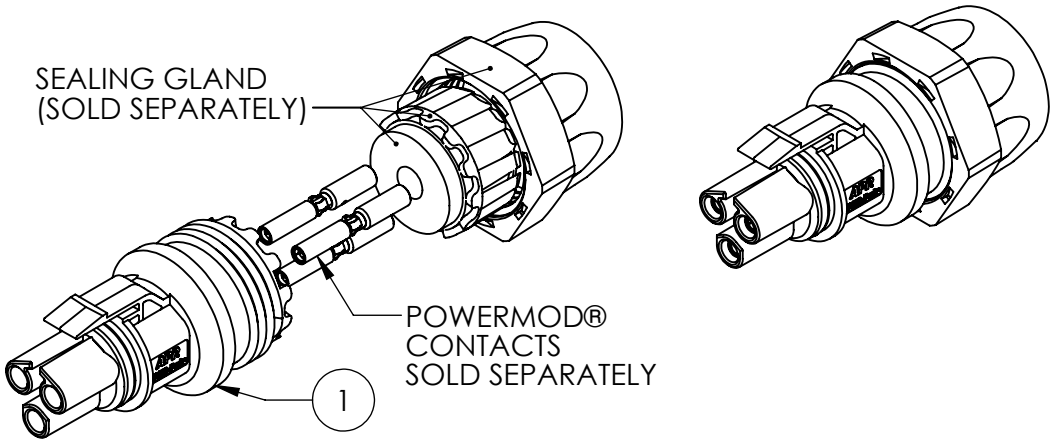

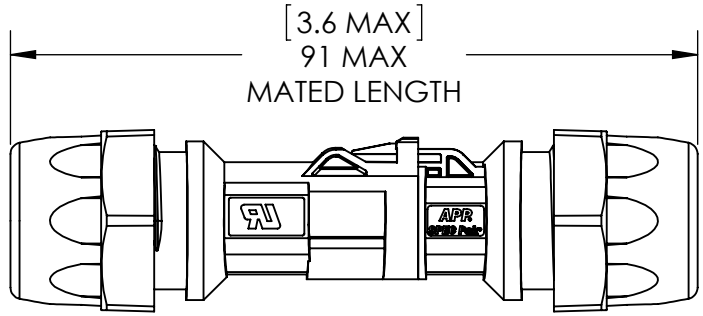

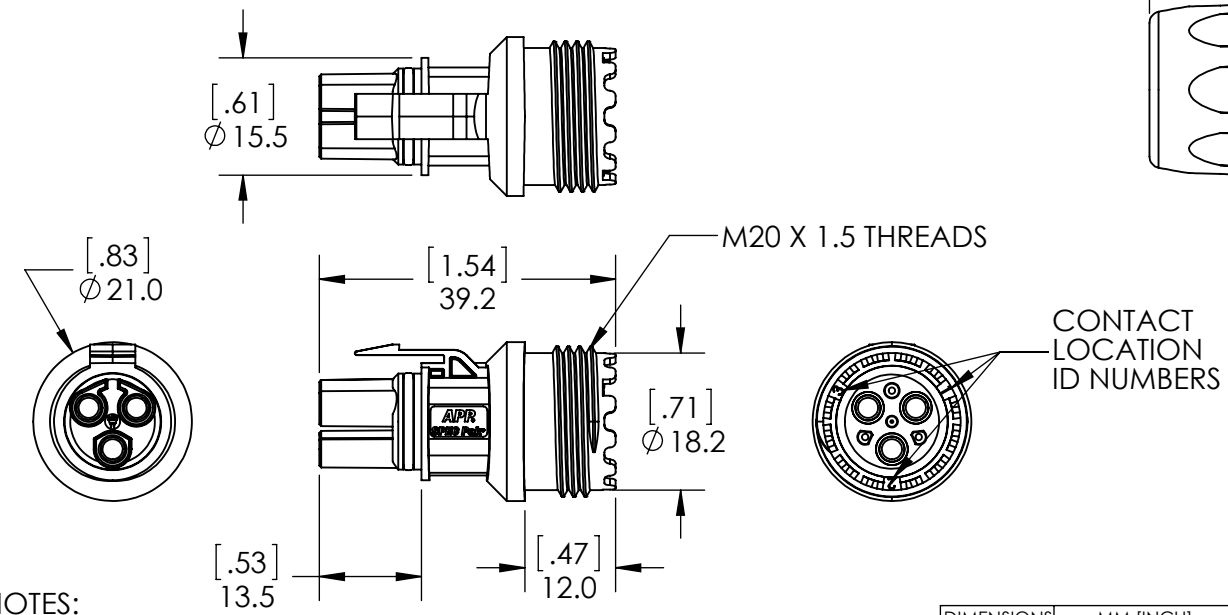

PART NO. SK6-019M03

NOTES:
1. MATERIAL:
   A. PLUG HOUSING - PC, BLACK
   B. O-RING - NBR, BLACK
2. FOR USE WITH POWERMOD® SOCKET CONTACTS (SOLD SEPARATELY)
3. REFER TO ASSEMBLY INSTRUCTIONS 1S6590

REV.	DESCRIPTION	APPRV	DATE
2	ECRN 15480	NTS	10/3/2013
1	ECRN 15459	NTS	8/2013

REVISIONS

DIMENSIONS ARE IN: MM [INCH]
UNLESS OTHERWISE STATED
TOLERANCES:
DECIMALS (INCH) .XX ± .02 DECIMALS (MM) .X ± .5 ANGLES ±2°
SURFACE FINISH:
MACHINED 3.2μ [128μin]
MOLDED 1.6μ [64μin]
MATERIAL: SEE NOTES
FINISH:
3rd ANGLE PROJECTION

APPROVALS	
DRAWN NTS	11/28/2012
CHECKED CMS	3/8/2013
MFG APPRV CHB	3/8/2013
QC APPRV UFN	3/8/2013
ENG APPRV BD	3/8/2013

-CAD GENERATED DRAWING-
DO NOT MANUALLY UPDATE
DO NOT SCALE

ANDERSON POWER PRODUCTS

TITLE: 3-POSITION MINI PL SPEC PAK® STRAIGHT PLUG SHELL (FEMALE)

SIZE	DWG NO.	REV.
A	115221S1	2
SCALE NONE	CADFILE 03867	SHEET 1 OF 1