THE INFORMATION CONTAINED IN THIS DRAWING IS THE SOLE PROPERTY OF ANDERSON POWER PRODUCTS. ANY REPRODUCTION IN PART OR WHOLE WITHOUT THE WRITTEN PERMISSION OF ANDERSON POWER PRODUCTS IS PROHIBITED.

Copyright 2011

ANDERSON POWER PRODUCTS RESERVES THE RIGHT TO ALTER PRODUCT TYPES, THEIR TECHNICAL DATA, DIMENSION, STYLE AND ACCESSORIES WITHOUT PRIOR NOTIFICATION.

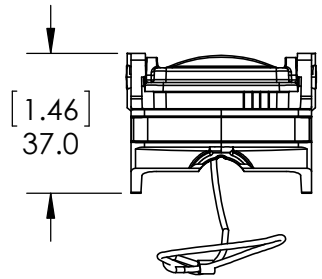

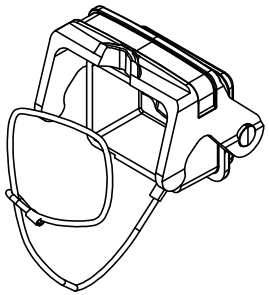

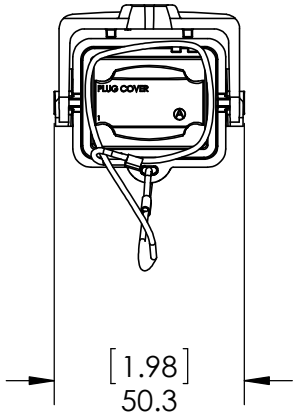

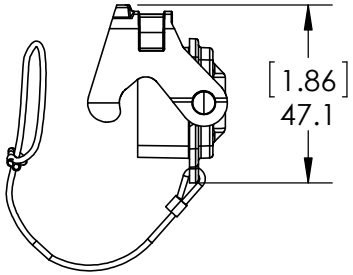

SHOWN MATED TO WITH PLUG KIT, SK6-050B04. PLUG KIT NOT INCLUDED.

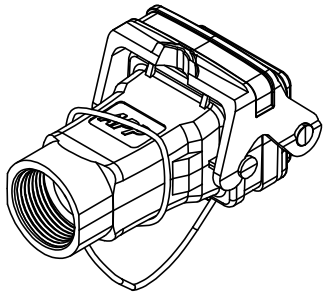

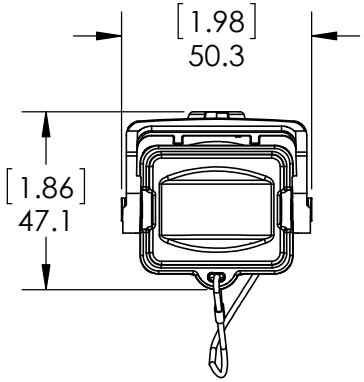

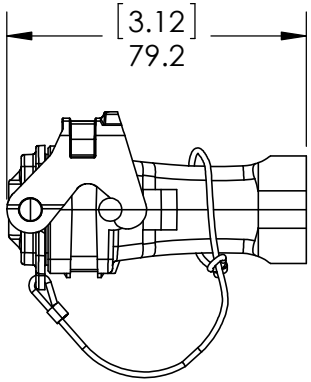

NOTES:
1. MATERIAL
   A. COVER - PC/PBT BLEND
   B. LANYARD - NYLON CORD, TIN AND CHROME PLATED COPPER ALLOY
   C. LATCH - NYLON
2. REFER TO ASSEMBLY INSTRUCTIONS
3. FOR USE WITH SK6-050B04

REV.	DESCRIPTION	APPRV	DATE
1	ECRN 14894	JHN	7/20/2011

REVISIONS

DIMENSIONS ARE IN: MM [INCH]

UNLESS OTHERWISE STATED

TOLERANCES:

DECIMALS (INCH)	DECIMALS (MM)	ANGLES
.XX ± .015	.X ± .38	±.5°
.XXX ± .005	.XX ± .13	

SURFACE FINISH:
MACHINED 128µin [3.2µ]
MOLDED 64µin [1.6µ]

MATERIAL: SEE NOTES

FINISH:

3rd ANGLE PROJECTION

APPROVALS

DRAWN	JHN	5/20/2011
CHECKED	MM	5/20/2011
MFG APPRV	CHB	5/20/2011
QC APPRV	UFN	5/20/2011
ENG APPRV	BD	5/20/2011

-CAD GENERATED DRAWING-
DO NOT MANUALLY UPDATE
DO NOT SCALE

ANDERSON POWER PRODUCTS

TITLE
SPEC PAK™ 4 POSITION PLUG COVER KIT, SK9P-050

SIZE	DWG NO.	REV.
A	115080S1	1
SCALE 1:2	CADFILE 03466	SHEET 1 OF 1